Work Order ID 50476

July 10, 2009 2:23:26 PM

Item ID: D3393-1
Revision ID: A
Item Name: Battery Lock Casing

Accept

Setup **Start**
Stop

Start Date: 7/06/09 **Start Qty:** 5.00
Required Date: 7/06/09 **Req'd Qty:** 5.00
Reference:

Cust Item ID:
Customer:

Run **Start**
Stop

Approvals: **Process Plan:** ✓ **Date:** **Tooling:** **Date:**
QC: **Date:** **SPC (Y/N):** **Date:**

Sequence ID/ Work Center ID	Operation Description	Set Up/ Run Hours	Draw Number	Draw Rev.	Plan Code	Accept Qty	Reject Qty	Reject Number	Insp. Stamp
100	BAND SAW	0.00				5			
Bandsaw Jeaspa Bandsaw JL 09/07/17	**Memo** Cut blank: 1.500" x 1.500" x 3.125" long	0.00							
110	HAAS CNC VERTICAL MACHINING #1	0.00				5	3		
HAAS 1 HAAS CNC vertical machine #1	**Memo** Machine D3393-1 as per Folio FA510 and Dwg D3393 Identify as D3393-1 Deburr	0.00				mwf 07/07/19			
120	QC2- Inspect parts off machine FAI/FAIB	0.00				5	0		
QC Quality Control	**Memo**	0.00				mwf 07/27/19			

PTO

Dart Aerospace Ltd

W/O:		WORK ORDER CHANGES					
DATE	STEP	PROCEDURE CHANGE	By	Date	Qty	Approval Chief Eng / Prod Mgr	Approval QC Inspector

Part No: D3393-1 PAR #: N/A Fault Category: Machining NCR: (Yes) No DQA: [illegible] Date: 09-08-11

Resolution: Scrap Disposition: Scrap QA: N/C Closed: [illegible] Date: 09-08-17

NCR: 50476		WORK ORDER NON-CONFORMANCE (NCR)						
DATE	STEP	Description of NC Section A	Corrective Action Section B: Initial Chief Eng	Action Description Chief Eng	Sign & Date	Verification Section C	Approval Chief Eng	Approval QC Inspector
09/07/19		2 part the hole .563 is To deep because drill bit got out of holder making holes .044 To deep Q.C. operator error	[illegible] 09/09/12	scrap and replace B108962 x 2	mw 09/07/019	[illegible] 09/07/20	[illegible] 09/09/12	[illegible] 09-07-20
09/07/19		1 part hole .338 is .353. bad offset Qc. operator error	[illegible] 09/09/12	scrap and replace B108962 x 1	mw 09/09/19	[illegible] 09/07/20	[illegible] 09/09/12	[illegible] 09-07-20

NOTE: Date & initial all entries

H:\fFORMS\Quality Assurance\approved QA\NCRWO RevE

Work Order ID 50476

July 10, 2009 2:23:26 PM

Item ID: D3393-1
Revision ID: A
Item Name: Battery Lock Casing

Accept

Setup Start
Stop

Start Date: 7/06/09 **Start Qty:** 5.00
Required Date: 7/06/09 **Req'd Qty:** 5.00
Reference:

Cust Item ID:
Customer:

Run Start
Stop

Approvals: **Process Plan:** _____ **Date:** _____ **Tooling:** _____ **Date:** _____
QC: _____ **Date:** _____ **SPC (Y/N):** _____ **Date:** _____

Sequence ID/ Work Center ID	Operation Description	Set Up/ Run Hours	Draw Number	Draw Rev.	Plan Code	Accept Qty	Reject Qty	Reject Number	Insp. Stamp
130	QC8- Inspect parts - second check	0.00							
QC	Memo	0.00				5	0		
Quality Control									
140	Chemical Conversion Coat per QSI005 4.1	0.00							
HandFinish	Memo	0.00							
Hand Finishing									
150	Fire Red(Ref:4.3.5.10) per QSI005 4.3	0.00							
Powdercoat	Memo	0.00							
Powder Coating	START TIME: 11:00 FINISH TIME: 12:30 OVEN TEMPERATURE: 320°F								

ml 04/07/20

(5x) ml 04/07/22

M112148 09-08-05 (x5)

Dart Aerospace Ltd

W/O:		WORK ORDER CHANGES					
DATE	STEP	PROCEDURE CHANGE	By	Date	Qty	Approval Chief Eng / Prod Mgr	Approval QC Inspector

Part No: _____ **PAR #:** _____ **Fault Category:** _____ **NCR:** Yes No **DQA:** _____ **Date:** _____

Resolution: _____ **Disposition:** _____ **QA: N/C Closed:** _____ **Date:** _____

NCR:		WORK ORDER NON-CONFORMANCE (NCR)						
DATE	STEP	Description of NC Section A	Corrective Action Section B			Verification Section C	Approval Chief Eng	Approval QC Inspector
			Initial Chief Eng	Action Description Chief Eng	Sign & Date			

NOTE: Date & initial all entries

H:\fFORMS\Quality Assurance\approved QA\NCRWO RevE

Work Order ID 50476

July 10, 2009 2:23:26 PM

Item ID: D3393-1
Revision ID: A
Item Name: Battery Lock Casing

Accept

Setup **Start**
Stop

Start Date: 7/06/09 **Start Qty:** 5.00
Required Date: 7/06/09 **Req'd Qty:** 5.00
Reference:

Cust Item ID:
Customer:

Run **Start**
Stop

Approvals: **Process Plan:** _____ **Date:** _____ **Tooling:** _____ **Date:** _____
QC: _____ **Date:** _____ **SPC (Y/N):** _____ **Date:** _____

Sequence ID/ Work Center ID	Operation Description	Set Up/ Run Hours	Draw Number	Draw Rev.	Plan Code	Accept Qty	Reject Qty	Reject Number	Insp. Stamp
160	QC3- Inspect Part Finish	0.00							
QC	Memo	0.00							
Quality Control									
170	Identify as per dwg & Stock Location: 486	0.00							
Packaging	Memo	0.00							
Packaging									
180	QC21- Final Inspection - Work Order Release	0.00							
QC	Memo	0.00							
Quality Control									

DR 09-08-5 5

9/8/6 5D SG

09-08-10

MF 09-08-06

Dart Aerospace Ltd

W/O:		WORK ORDER CHANGES					
DATE	STEP	PROCEDURE CHANGE	By	Date	Qty	Approval Chief Eng / Prod Mgr	Approval QC Inspector

Part No: _____ **PAR #:** _____ **Fault Category:** _____ **NCR:** Yes No **DQA:** _____ **Date:** _____

Resolution: _____ **Disposition:** _____ **QA: N/C Closed:** _____ **Date:** _____

NCR:		WORK ORDER NON-CONFORMANCE (NCR)						
DATE	STEP	Description of NC Section A	Corrective Action Section B			Verification Section C	Approval Chief Eng	Approval QC Inspector
			Initial Chief Eng	Action Description Chief Eng	Sign & Date			

NOTE: Date & initial all entries

H:\FORMS\Quality Assurance\approved QA\NCRWO RevE

Picklist Print

July 10, 2009 2:23:25 PM

Work Order ID: 50476

Parent Item: D3393-1RevA

Parent Item Name: Battery Lock Casing

Start Date: 7/06/09 **Required Date:** 7/06/09

Comments:

Start Qty: 5.00 **Required Qty:** 5.00

Component Item ID/ Item Name	Replacement Item ID	Mfg/ Purch	Bin Item	Primary Location	Last Location	Route Seq ID	Unit of Measure	Qty on Hand	Remaining Qty To Pick	Qty Issued	Date Issued	Status
M6061T6B1.500X01.500		Purchased	No			100	f	59.5700	1.4253			

6061-T6 Bar 1.50 x 1.50

Warehouse Location	Loc Qty	Loc Code	
Main Warehouse			
MAT	59.57		
107244	32.67		
107432	20		
108962	6.9		1.4253 JL 09/07/17

Dart Aerospace Ltd

W/O:		WORK ORDER CHANGES					
DATE	STEP	PROCEDURE CHANGE	By	Date	Qty	Approval Chief Eng / Prod Mgr	Approval QC Inspector

Part No: _____ **PAR #:** _____ **Fault Category:** _____ **NCR:** Yes No **DQA:** _____ **Date:** _____

Resolution: _____ **Disposition:** _____ **QA: N/C Closed:** _____ **Date:** _____

NCR:		WORK ORDER NON-CONFORMANCE (NCR)						
DATE	STEP	Description of NC Section A	Corrective Action Section B			Verification Section C	Approval Chief Eng	Approval QC Inspector
			Initial Chief Eng	Action Description Chief Eng	Sign & Date			

NOTE: Date & initial all entries

H:\fFORMS\Quality Assurance\approved QA\NCRWO RevE

DART AEROSPACE LTD	Work Order:	50476
Description: Battery Lock Casing	Part Number:	D3393-1
Inspection Dwg: D3393 **Rev:** A		Page 1 of 1

FIRST ARTICLE INSPECTION CHECKLIST

[X] First Article [ ] Prototype

Drawing Dimension	Tolerance	Actual Dimension	Accept	Reject	Method of Inspection	Comments
Ø0.750	+0.010/-0.000	Ø.751	✓			
0.625	+0.010/-0.000	.627	✓			
Ø1.250	+/-0.010	Ø1.251	✓			
1.088	+/-0.010	1.086	✓			
Ø0.734	+/-0.010	Ø.735	✓			
2.658	+/-0.010	2.654	✓			
1.550	+/-0.010	1.552	✓			
0.125 x 45°	+/-0.010 x 0.5°	.125x45°	✓			
1.50	+/-0.030	1.49	✓			
0.750	+/-0.010	.747	✓			
Ø1.050	+/-0.010	Ø1.050	✓			
Ø1.000	+/-0.010	Ø1.003	✓			
0.338	+/-0.010	.332	✓			
0.563	+/-0.010	.558	✓			
0.100	+0.000/-0.010	.100	✓			
3.00	+/-0.030	3.009	✓			
1.500	+/-0.010	1.497	✓			
0.375	+/-0.010	.376	✓			
1.25	+/-0.030	1.251	✓			
0.125	+/-0.010	.130	✓			
30°	0.5°	30°				

Measured by:	[signature]	Audited by:	[signature]	Prototype Approval:	N/A
Date:	09/07/19	Date:	09/07/20	Date:	N/A

Rev	Date	Change	Revised by	Approved
A	05.04.27	New Issue	KJ/JLM	
B	08.11.28	Tolerances revised	KJ/EC	

Dart Aerospace Ltd

W/O:		WORK ORDER CHANGES					
DATE	STEP	PROCEDURE CHANGE	By	Date	Qty	Approval Chief Eng / Prod Mgr	Approval QC Inspector

Part No: _____ **PAR #:** _____ **Fault Category:** _____ **NCR:** Yes No **DQA:** _____ **Date:** _____

Resolution: _____ **Disposition:** _____ **QA: N/C Closed:** _____ **Date:** _____

NCR:		WORK ORDER NON-CONFORMANCE (NCR)						
DATE	STEP	Description of NC Section A	Corrective Action Section B			Verification Section C	Approval Chief Eng	Approval QC Inspector
			Initial Chief Eng	Action Description Chief Eng	Sign & Date			

NOTE: Date & initial all entries

H:\fFORMS\Quality Assurance\approved QA\NCRWO RevE

DESIGN	DRAWN BY	DART AEROSPACE LTD HAWKESBURY, ONTARIO, CANADA	
CHECKED	APPROVED	DRAWING NO. D3393	REV. A SHEET 3 OF 3
DATE 05.02.09		TITLE BATTERY LOCK	SCALE 2:1

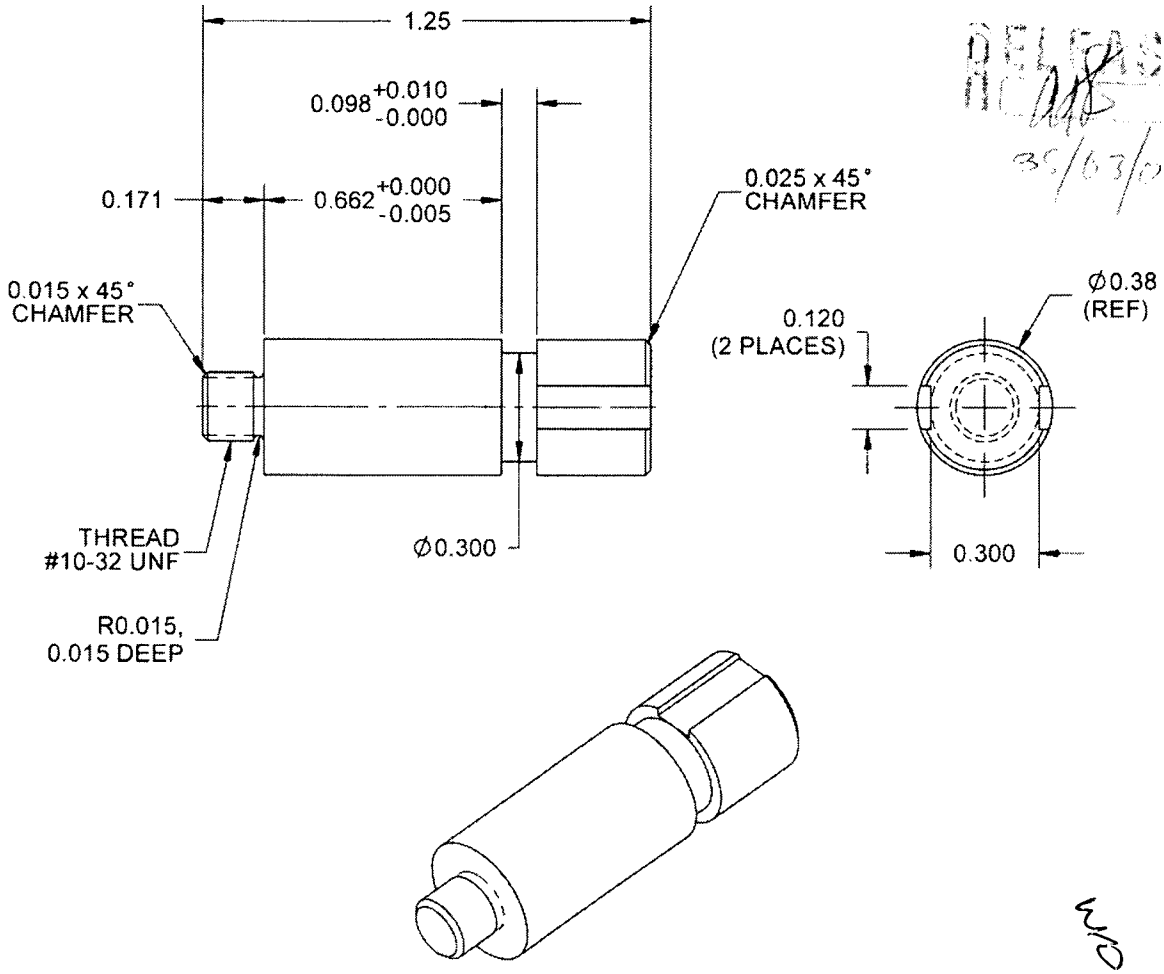

RELEASED
35/03/09

WO 504 76

D3393-3 CAM LOCK SHAFT

NOTES:

1) MATERIAL: AISI 303 S.S. (REF. DART SPEC. M303R0.375)
2) TOLERANCES ARE PER DART QSI 018 UNLESS OTHERWISE NOTED
3) ALL DIMENSIONS ARE IN INCHES
4) BREAK ALL SHARP EDGES 0.005 TO 0.010

COPYRIGHT © 2005 BY DART AEROSPACE LTD.

THIS DOCUMENT IS PRIVATE AND CONFIDENTIAL AND IS SUPPLIED ON THE EXPRESS CONDITION THAT IT IS NOT TO BE USED FOR ANY PURPOSE OR COPIED OR COMMUNICATED TO ANY OTHER PERSON WITHOUT WRITTEN PERMISSION FROM DART AEROSPACE LTD.

Dart Aerospace Ltd

W/O:		WORK ORDER CHANGES					
DATE	STEP	PROCEDURE CHANGE	By	Date	Qty	Approval Chief Eng / Prod Mgr	Approval QC Inspector

Part No: _____ **PAR #:** _____ **Fault Category:** _____ **NCR:** Yes No **DQA:** _____ **Date:** _____

Resolution: _____ **Disposition:** _____ **QA: N/C Closed:** _____ **Date:** _____

NCR:		WORK ORDER NON-CONFORMANCE (NCR)						
DATE	STEP	Description of NC Section A	Corrective Action Section B			Verification Section C	Approval Chief Eng	Approval QC Inspector
			Initial Chief Eng	Action Description Chief Eng	Sign & Date			

NOTE: Date & initial all entries

H:\fFORMS\Quality Assurance\approved QA\NCRWO RevE

DESIGN	DRAWN BY	DART AEROSPACE LTD HAWKESBURY, ONTARIO, CANADA	
CHECKED	APPROVED	DRAWING NO. D3393	REV. A SHEET 1 OF 3
DATE 05.02.08		TITLE BATTERY LOCK	SCALE 1:1
A	05.02.08	NEW ISSUE	

RELEASED
25/03/09

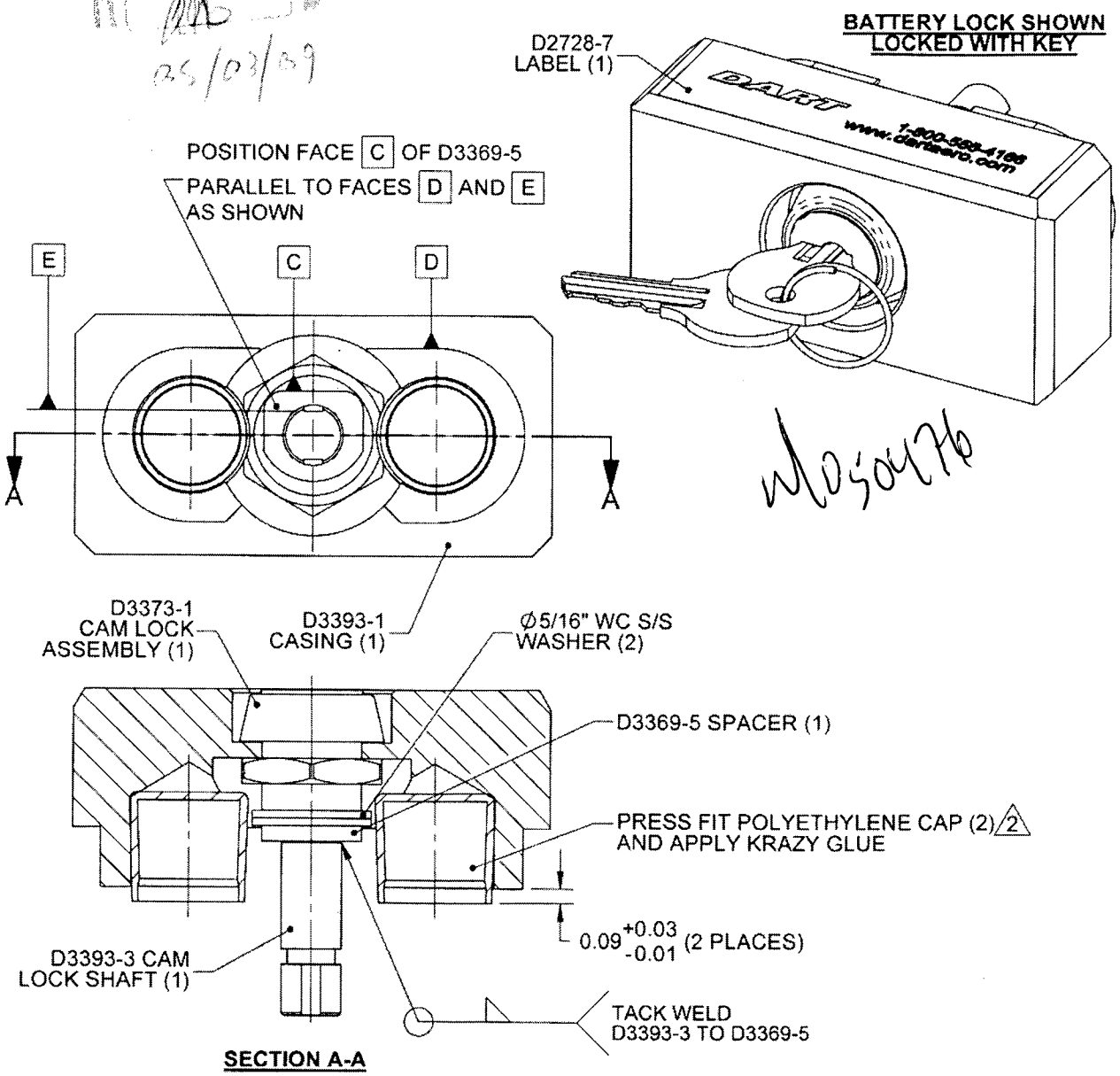

W050476

D3393-041 BATTERY LOCK ASSEMBLY

NOTES:

1) WELD PER DART QSI 004
2) POSSIBLE SUPPLIER: McMASTER-CARR, P/N 9567K21

COPYRIGHT © 2005 BY DART AEROSPACE LTD.

THIS DOCUMENT IS PRIVATE AND CONFIDENTIAL AND IS SUPPLIED ON THE EXPRESS CONDITION THAT IT IS NOT TO BE USED FOR ANY PURPOSE OR COPIED OR COMMUNICATED TO ANY OTHER PERSON WITHOUT WRITTEN PERMISSION FROM DART AEROSPACE LTD.

Dart Aerospace Ltd

W/O:		WORK ORDER CHANGES					
DATE	STEP	PROCEDURE CHANGE	By	Date	Qty	Approval Chief Eng / Prod Mgr	Approval QC Inspector

Part No: _____ PAR #: _____ Fault Category: _____ NCR: Yes No DQA: _____ Date: _____

Resolution: _____ Disposition: _____ QA: N/C Closed: _____ Date: _____

NCR:		WORK ORDER NON-CONFORMANCE (NCR)						
DATE	STEP	Description of NC Section A	Corrective Action Section B			Verification Section C	Approval Chief Eng	Approval QC Inspector
			Initial Chief Eng	Action Description Chief Eng	Sign & Date			

NOTE: Date & initial all entries

H:\fFORMS\Quality Assurance\approved QA\NCRWO RevE

DESIGN	DRAWN BY	DART AEROSPACE LTD HAWKESBURY, ONTARIO, CANADA	
CHECKED	APPROVED	DRAWING NO. D3393	REV. A SHEET 2 OF 3
DATE 05.02.09		TITLE BATTERY LOCK	SCALE 1:1

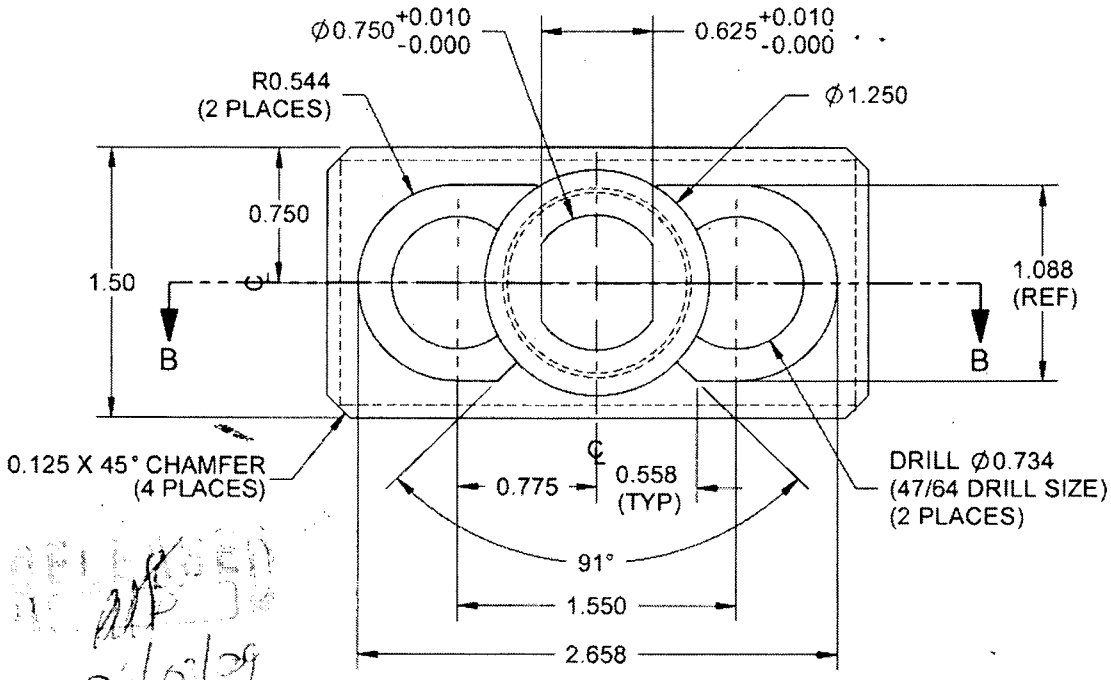

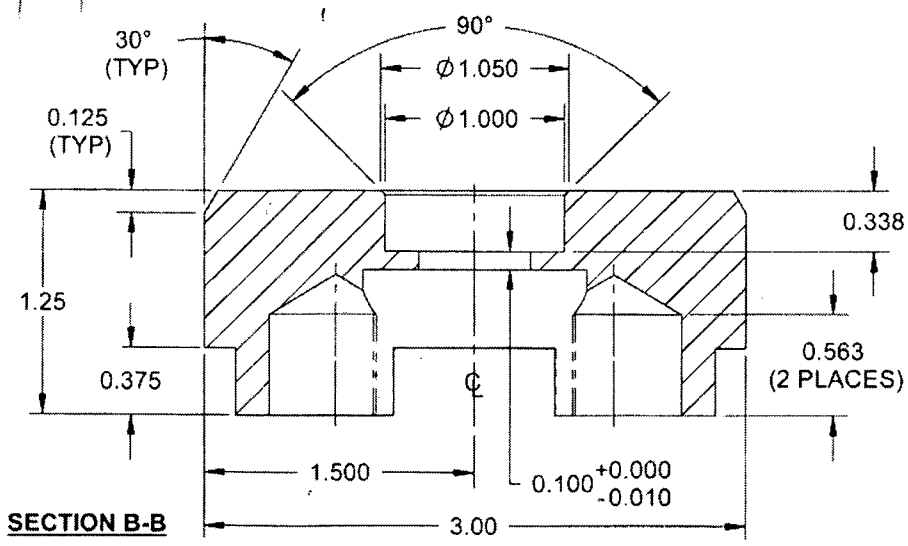

SECTION B-B

D3393-1 CASING

NOTES:

1) MATERIAL: 6061-T6/T651 (QQ-A-200/8 OR QQ-A-225/8)
(REF. DART SPEC. M6061T6B)
2) FINISH: CHEMICAL CONVERSION COAT PER DART QSI 005 4.1
POWDER COAT FIRE RED (4.3.5.10) PER DART QSI 005 4.3
3) TOLERANCES ARE PER DART QSI 018 UNLESS OTHERWISE NOTED
4) ALL DIMENSIONS ARE IN INCHES
5) BREAK ALL SHARP EDGES 0.005 TO 0.010

COPYRIGHT © 2005 BY DART AEROSPACE LTD.

THIS DOCUMENT IS PRIVATE AND CONFIDENTIAL AND IS SUPPLIED ON THE EXPRESS CONDITION THAT IT IS NOT TO BE USED FOR ANY PURPOSE OR COPIED OR COMMUNICATED TO ANY OTHER PERSON WITHOUT WRITTEN PERMISSION FROM DART AEROSPACE LTD.

Dart Aerospace Ltd

W/O:		WORK ORDER CHANGES					
DATE	STEP	PROCEDURE CHANGE	By	Date	Qty	Approval Chief Eng / Prod Mgr	Approval QC Inspector

Part No: _____ PAR #: _____ Fault Category: _____ NCR: Yes No DQA: _____ Date: _____

Resolution: _____ Disposition: _____ QA: N/C Closed: _____ Date: _____

NCR:		WORK ORDER NON-CONFORMANCE (NCR)						
DATE	STEP	Description of NC Section A	Corrective Action Section B			Verification Section C	Approval Chief Eng	Approval QC Inspector
			Initial Chief Eng	Action Description Chief Eng	Sign & Date			

NOTE: Date & initial all entries

H:\fFORMS\Quality Assurance\approved QA\NCRWO RevE